neverdark

# Neverdark CHALET-I (IN)

Smart fireplace

HETVOOR
PREMIUM FIRES

TECHNICAL DOCUMENTATION

Dovozce a prodejce:
Hetvoor Distribution
Okružní 781, 250 81 Nehvizdy
www.hetvoor.cz

# CONTENT


| | |
|---|---|
| **04 CONFIGURATION**<br>04 Standard configuration<br>05 Optional Extra<br>**06 THERMOBOXES**<br>**07 FIREPLACE INTERFACES**<br>**08 DIMENSIONS** | **FIREPLACE** |
| **09 NICHE PREPARATION**<br>09 Niche dimensions<br>10 Niche requirements<br>**11 INSTALLATION** | **INSTALLATION** |
| **12 FEATURES**<br>12 Technical information<br>13 Warnings | **TECHNICAL INFORMATION** |

**ATTENTION!** This document, along with the User Manual, is a part of the device and is being delivered along with the fireplace (hereinafter collectively referred to as «Instructions»).
If one or both of these documents weren't delivered with your fireplace, please contact the manufacturer prior to the installation and/or use of the fireplace.

- Make sure to read this Technical Documentation (hereinafter «Documentation») before using the fireplace!
- Keep this Documentation in a safe place for the lifetime of the fireplace!
- This appliance by design, method of operation, consumer properties and technical safety fully complies with the requirements of the European Standard EN 16647:2015

**ATTENTION!** Please follow local laws when using the appliance.

## SYMBOLS

FIRE AND BURN HAZARD SIGN

A WARNING SIGN indicates a potential for property damage, personal injury, or death

AN ATTENTION SIGN indicates important information

# CONFIGURATION

## Standard configuration

| | |
|---|---|
| 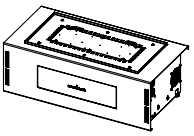 | Smart fireplace<br>(Standard top panel<br>Black matte)<br><br>1 pc |
| 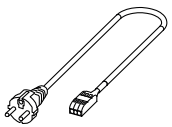 | Power cable:<br>Euro Plug — WAGO<br>(length 2,7 m)<br><br>1 set |
| 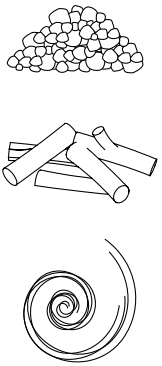 | Decorative elements:<br>decorative stones,<br>ceramic firewood,<br>fiber for glow effect<br><br>1 set |

| | |
|---|---|
| | Fuel hose<br><br>1 pc |
| 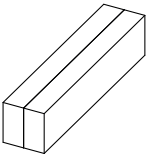 | Packaging<br><br>1 pc |
| | Documentation<br><br>1 set |

## Optional extra

You can add any option listed below:

| | |
|---|---|
| | **G**lass **B**order<br>code<br>**GB** |
| 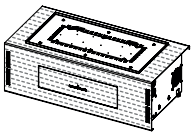 | **C**ustom **T**op<br>(**R**AL **M**atte)<br>code<br>**CT** (**RM**) |

| | |
|---|---|
| | **R**emote **C**ontrol<br>code<br>**RC** |
| 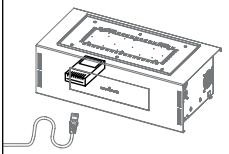 | **S**mart **H**ome connection module<br>code<br>**SH** |

# THERMOBOXES

You can also choose the Neverdark Thermobox for your fireplace. The Thermobox can withstand temperatures up to 200°C, allowing you to choose any material for lining the niche.

| | |
|---|---|
| 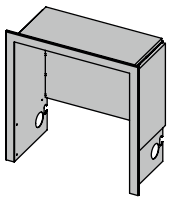 | **C**halet-**I B**ox<br>Standard Installation<br>code<br>**F-C1-B-650** |
| 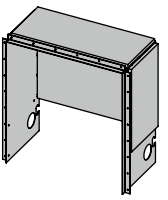 | **C**halet-**I B**ox<br>Hidden Installation<br>code<br>**H-C1-B-650** |

# FIREPLACE INTERFACES

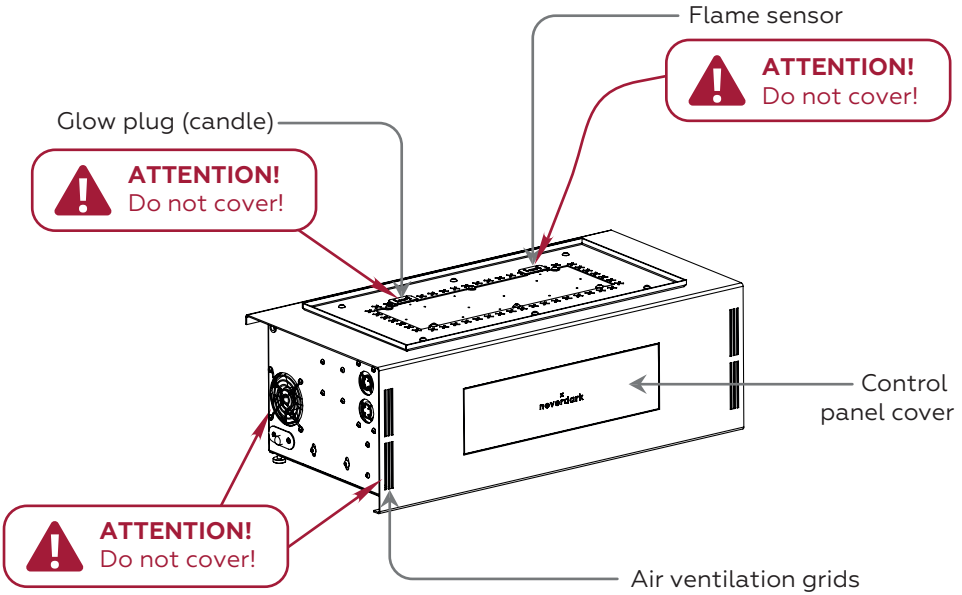


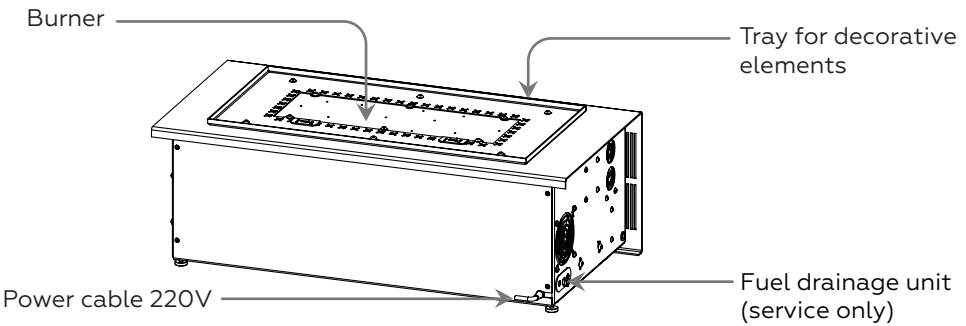

# DIMENSIONS

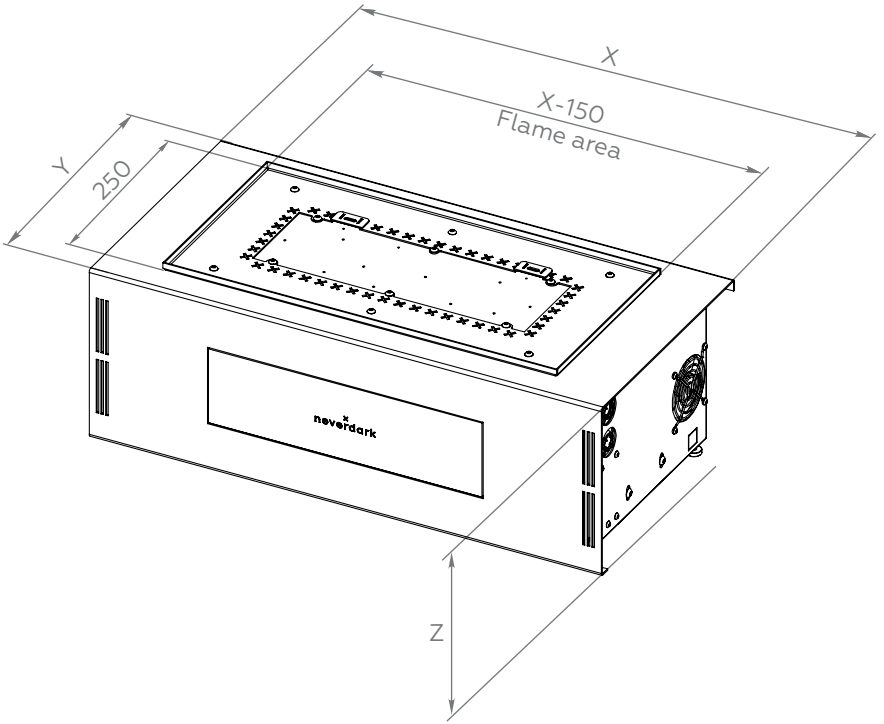


Standard range

| | | X | Y | Z | |
|---|---|---|---|---|---|
| **Model** | **Code** | **Length, mm** | **Depth, mm** | **Height, mm** | **Weight, kg** |
| Chalet-I 650 (in) | C1-650-in | 650 | 320 | 220 | 20 |

# NICHE PREPARATION

## Niche dimensions

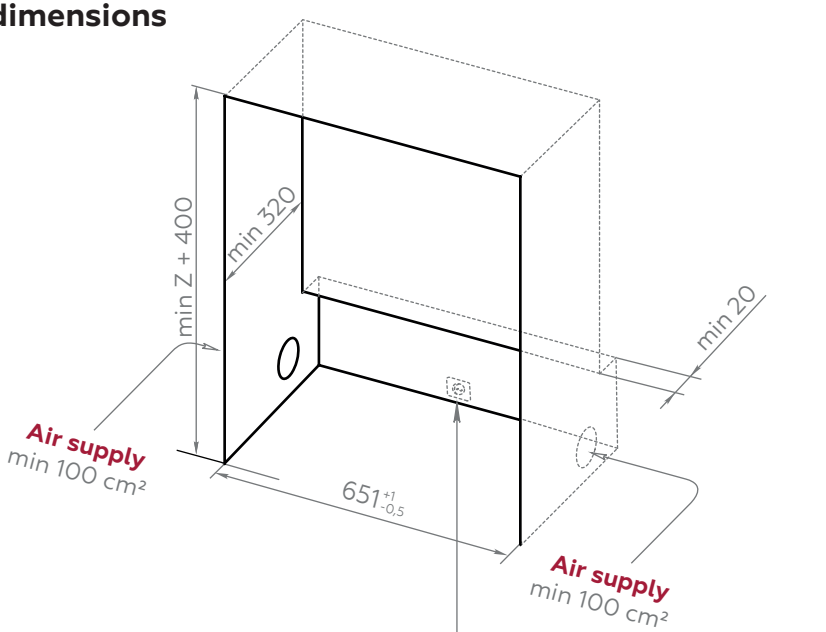


**WARNING!** For correct operation of the Fireplace, it must be installed 100% horizontally according to the level!

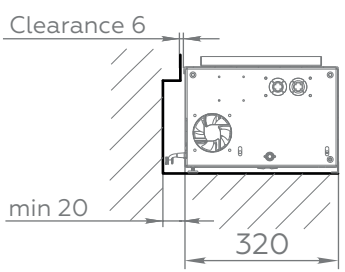


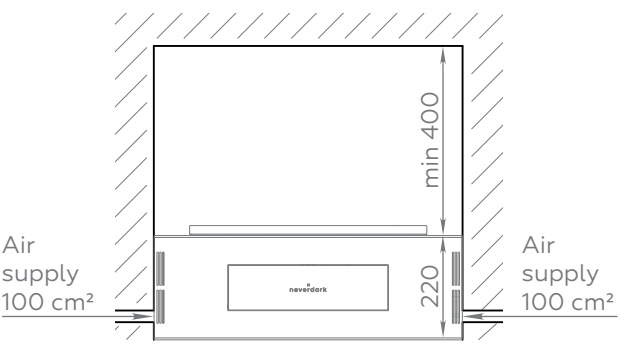

## Niche requirements

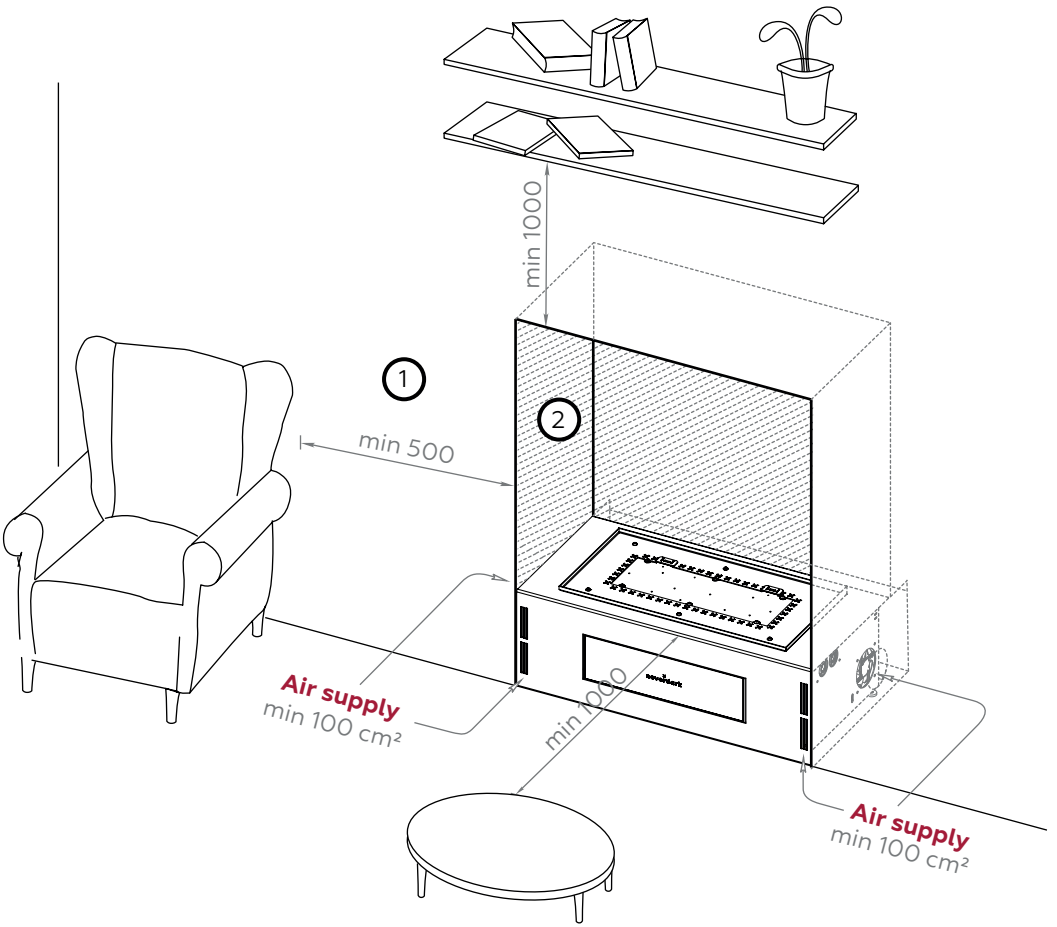


1

**WARNING!**
Min 1000 mm to flammable objects from any exposed side of the niche.

Min 500 mm to flammable objects from any closed side of the niche.

2

**WARNING!**
Heat-resistant material which withstands 150°C at least.

Alternatively, a non heat-resistant material + Neverdark Thermobox

# INSTALLATION

**WARNING!** 220V cable connection must be carried out by a qualified electrician.

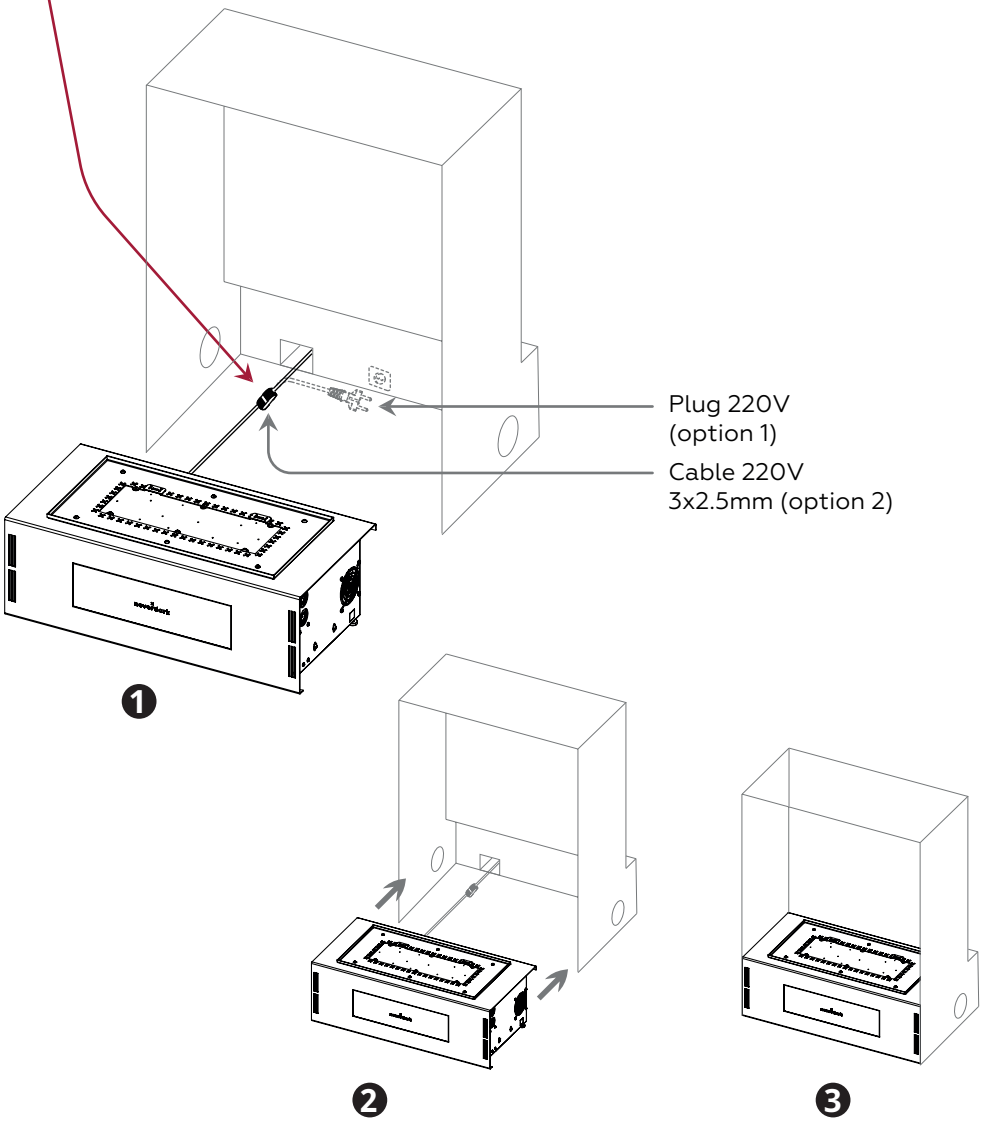

# FEATURES

## Technical information

| Parameters | Fireplace model |
|---|---|
| | Chalet-I (In) 650 |
| Tank volume, l | 3 |
| System volume, l | 3,5 |
| Consumption, l/h (min \| max) | 0,4 \| 1,0 |
| Average consumption, l/h (min \| max) | 0,7 |
| Burning time, h (min \| max) | 3,0 \| 7,5 |
| Room size, $m^2$ (with I without ventilation system) | 27 \| 68 |
| Max power consumption, kW | 0,9 |
| Heat power, kW (min \| max) | 2,6 \| 6,5 |
| Air consumption, $m^3/h$ (min \| max) | 0,7 \| 1,9 |
| $CO_2$ release, $m^3/h$ (min \| max) | 0,3 \| 0,8 |

* Kindly note that some parameters may slightly vary (within 10%), due to different manufacturing date, climate/surrounding effects, fuel, etc.

**Read USER MANUAL**

**Read SAFETY INSTRUCTION**

## Warnings

The manufacturer does not recommend placing objects that are sensitive to high temperatures above or next to the fireplace as this may significantly shorten their service lifetime.

In case the Technical Documentation and User Manual were not followed, the manufacturer would not be responsible for any damage to objects above or next to the fireplace.

**ATTENTION!** Kindly follow next rules while using the Neverdark fireplace:

- Keep away from children;
- Ensure that the wall/table/floor on which you place the appliance can withstand its weight;
- Install in a place protected from draughts only;
- Do not cover top or side ventilation grids;
- Do not place flammable objects on the appliance;
- Keep a carbon dioxide fire extinguisher within sight;
- The use of a separate electricity line with a fuse and/or circuit breaker is mandatory;
- For comfortable use of the fireplace it is necessary to ensure the supply of a fresh air into the room, as well as removal of a cobustion products. It can be a ventilation extractor, recuperator or an opened window;
- Keep this Documentation in a safe place for the lifetime of the fireplace!

NEVERDARK LLC